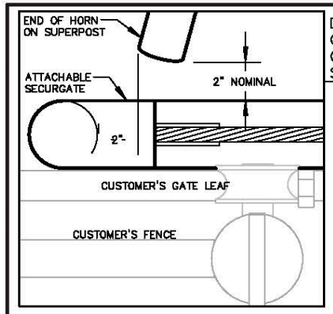

DETAIL OF CLEARANCE ON HORNS TO SECURGATE

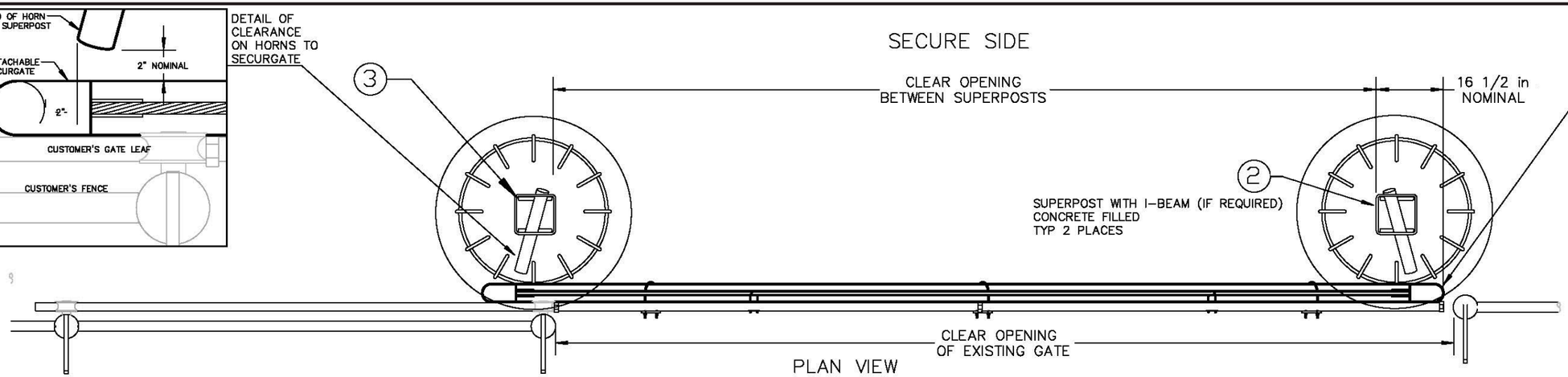

PLAN VIEW

DETAIL OF CLEARANCES HORNS AND SECURGATE

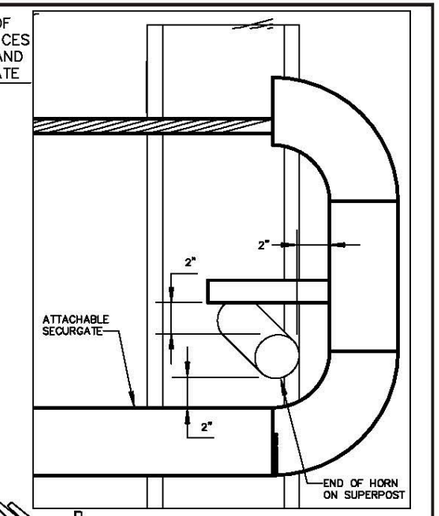

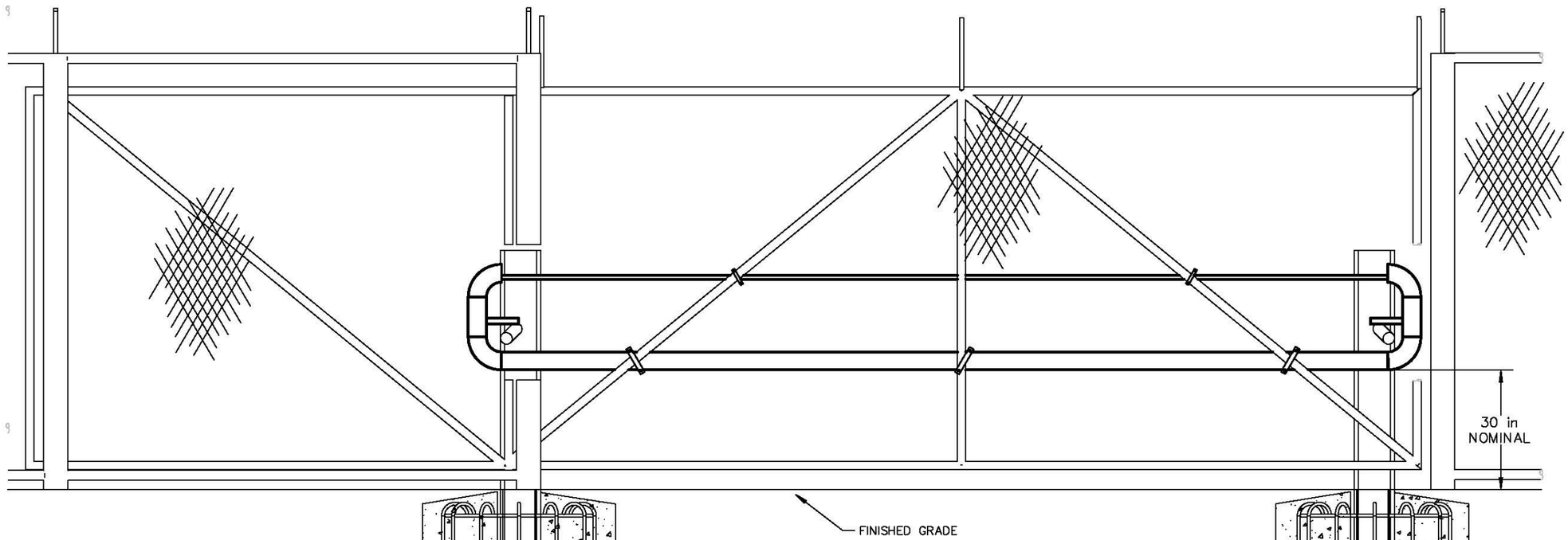

ELEVATION VIEW

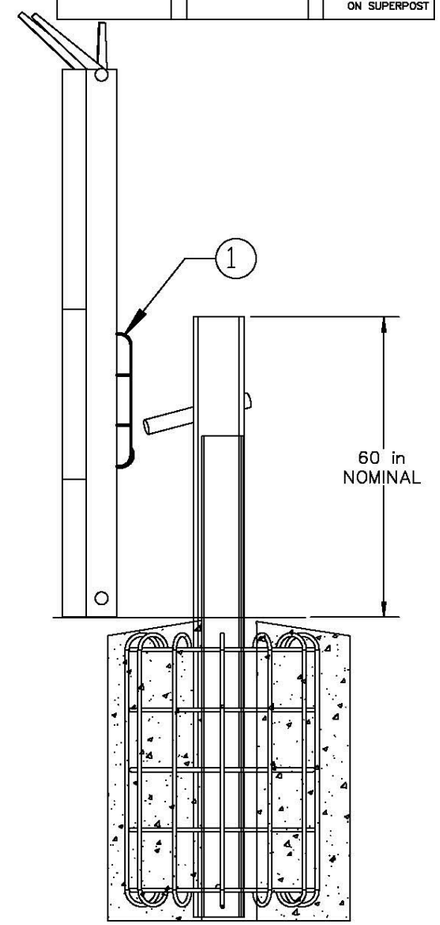

PART	QTY	DESC
1	1	CRASHBEAM ASSEMBLY
2	1	FIXED SUPERPOST (RH)
3	1	FIXED SUPERPOST (LH)

NO	DATE	REVISION	BY	CK	APPR
0	01FEB18	ORIGINAL ISSUE	MLK	JWA	JWA

PREPARED BY	KUNEMAN	01FEB18
CHECKED BY	ANDERSON	01FEB18
DISCIPL APPR	ANDERSON	01FEB18
INTERFACE CK		
PM APPR		
CLIENT APPR		

INNOVO SECURITY WORKS LLC

JOB NAME: ATTACHABLE SECURGATE CABLE LOOP CRASH BEAM SLIDING SINGLE LEAF

CSP-DF 2.5.1.2

SHEET TITLE: PRODUCT ILLUSTRATION

JOB NO: 1807-3

DATE: 01FEB18

REV NO: 0

SCALE: NONE

DWG NO: SI002